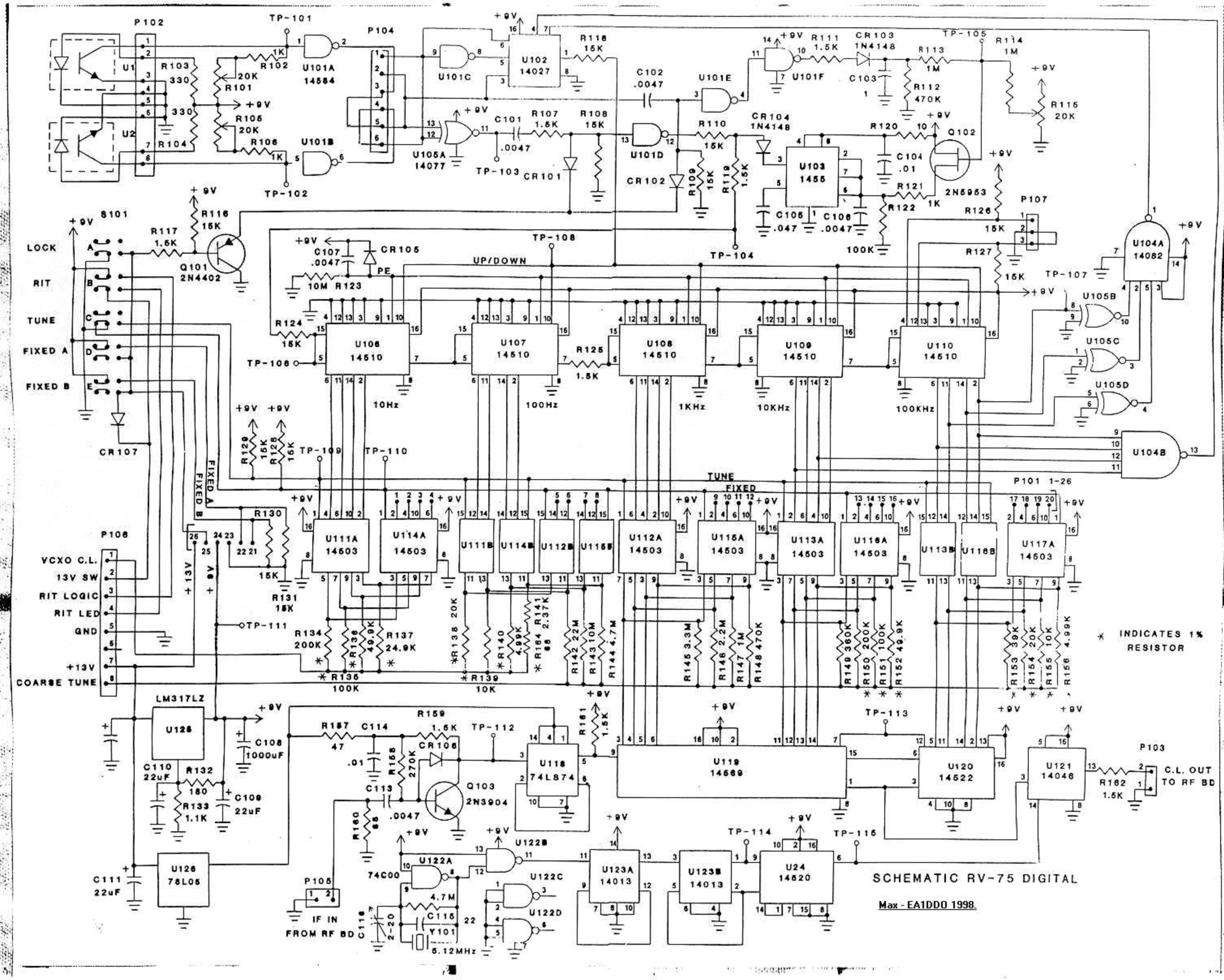
P102
TP-101
TP-102
TP-103
TP-104
TP-105
TP-106
TP-107
TP-108
TP-109
TP-110
TP-111
TP-112
TP-113
TP-114
TP-115
P104
P105
P106
P107
P101 1-26
P103
C.L. OUT TO RF BD
IF IN FROM RF BD
S101
LOCK
RIT
TUNE
FIXED A
FIXED B
VCXO C.L.
13V SW
RIT LOGIC
RIT LED
GND
+13V
COARSE TUNE
UP/DOWN
PE
10Hz
100Hz
1KHz
10KHz
100KHz
LM317LZ
5.12MHz
SCHEMATIC RV-75 DIGITAL
Max - EA1DDO 1998.
* INDICATES 1% RESISTOR